# Typical Sanitary Sewer Manhole

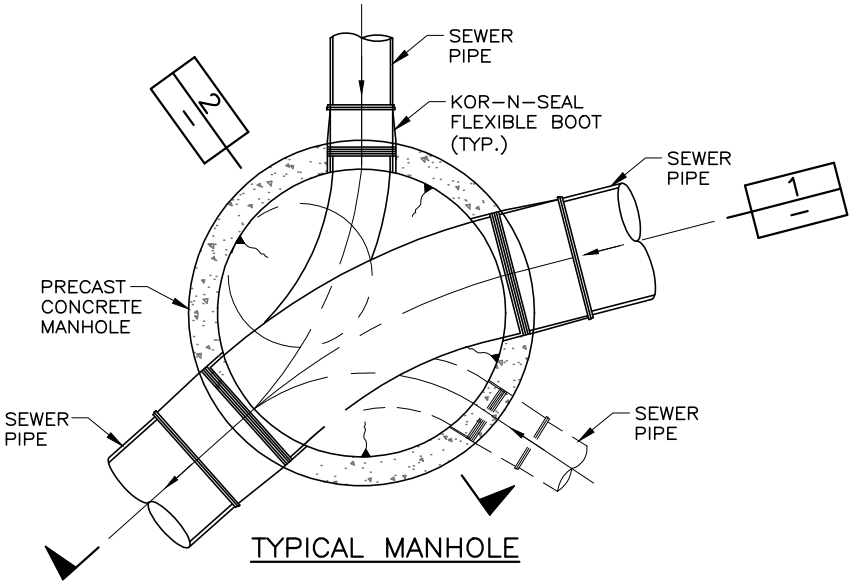


TYPICAL MANHOLE

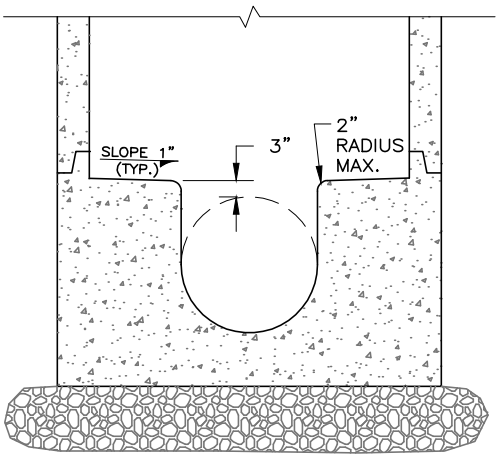


SEWER MANHOLE CHANNEL SECTION (TYP.) 2 / –

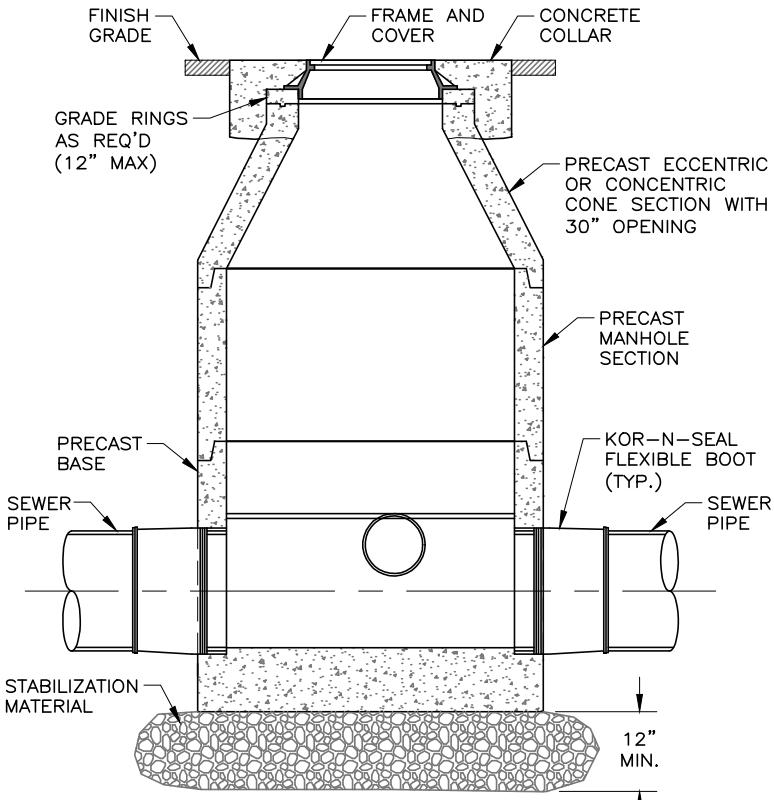


SECTION 1 / –

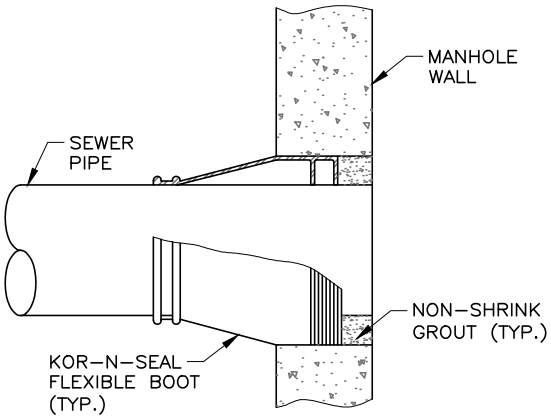


RUBBER BOOT DETAIL

NOTES:

1. MANHOLE SIZE:
   A. DIAMETER IS 4 FEET: FOR SEWERS UNDER 12" DIAMETER.
   B. DIAMETER IS 5 FEET: FOR SEWERS 12" THROUGH 24", OR WHEN 3 OR MORE PIPES INTERSECT THE MANHOLE.
   C. CONSULT WITH MTOID FOR SEWERS LARGER THAN 24".
2. PRECAST REINFORCED CONCRETE MANHOLE SECTIONS SHALL CONFORM TO ASTM C 478. JOINTS SHALL BE RUBBER GASKET, OR SEALED WITH APPROVED SEALANT.
3. CONCRETE: CLASS 4000, APWA SECTION 03 30 04.
4. GROUT: 2 PARTS SAND TO 1 PART CEMENT MORTAR, ASTM C 1329. GROUT SHALL BE NON–SHRINK.
5. MANHOLES SHALL NOT HAVE STEPS.
6. ADDITIONAL WATERPROOFING OF MANHOLES MAY BE REQUIRED WITHIN 400 FEET OF WATERBODIES AT THE DISCRETION OF THE DISTRICT ENGINEER.

# Typical Drop Manhole

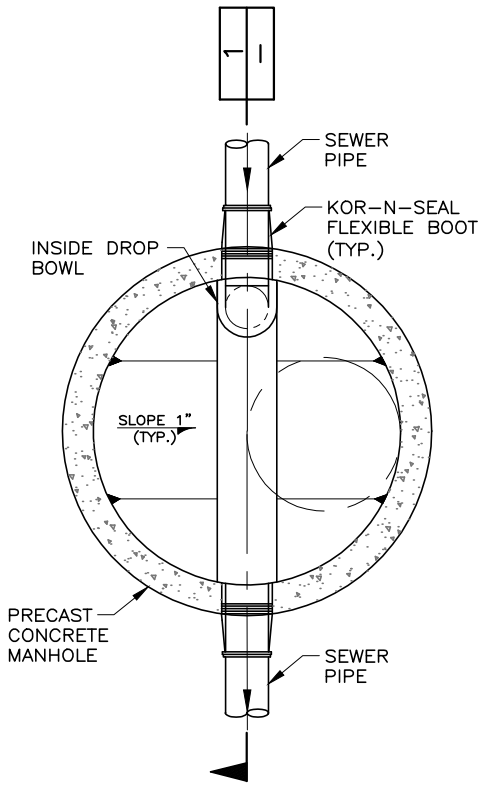


TYPICAL DROP MANHOLE

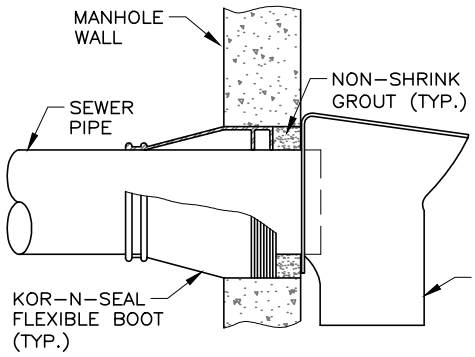


RUBBER BOOT DETAIL

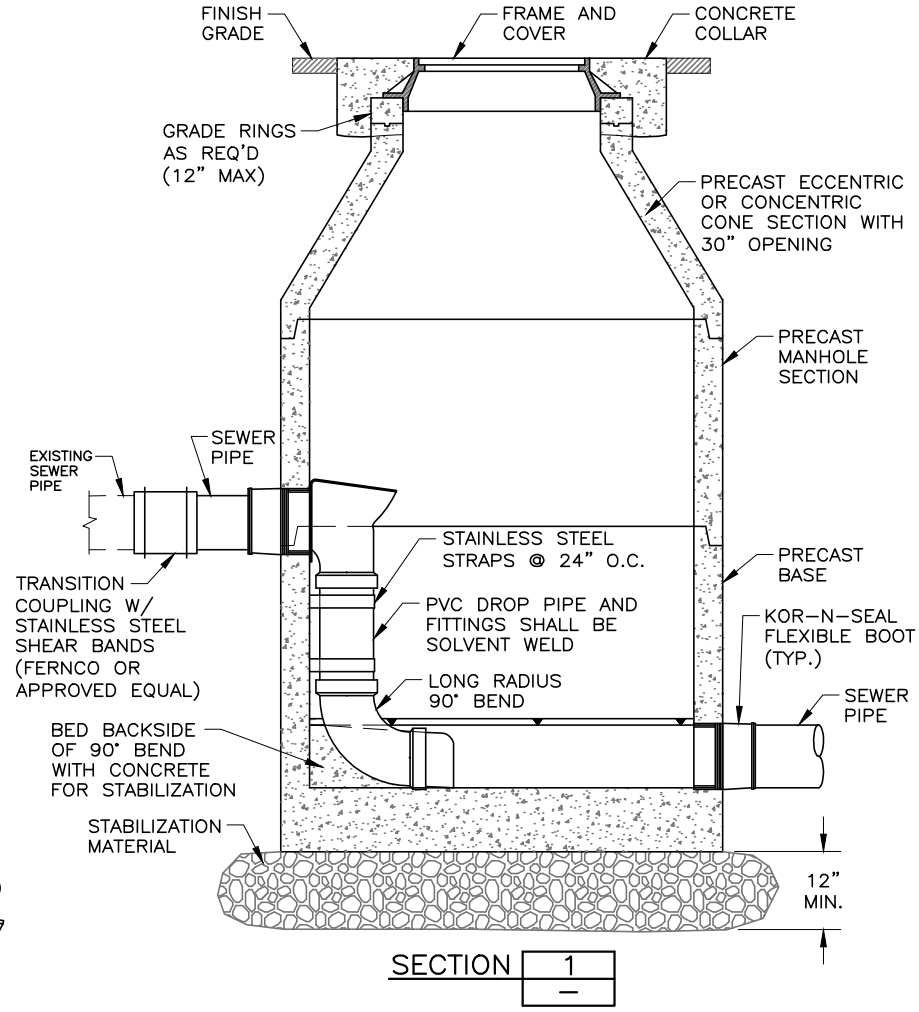


SECTION 1 —

INSIDE DROP BOWL SHALL BE ATTACHED TO THE MANHOLE WALL WITH STAINLESS EXPANSION BOLTS AND SPECIAL FULLY ADJUSTABLE STAINLESS STEEL PIPE CLAMPING SUPPORTS.

NOTES (CONTINUED):

5. THE INVERT CHANNELS SHALL BE SMOOTH AND SEMICIRCULAR IN SHAPE CONFORMING TO THE INSIDE DIAMETER OF THE ADJACENT SEWER SECTION. CHANGES IN DIRECTION OF FLOW SHALL BE MADE WITH A SMOOTH CURVE AS LARGE A RADIUS AS THE SIZE OF THE MANHOLE WILL PERMIT. CHANGES IN SIZE AND GRADE OF THE CHANNELS SHALL BE MADE GRADUALLY AND EVENLY.

6. THE FLOOR OF THE MANHOLE OUTSIDE THE CHANNELS SHALL BE SMOOTH AND SHALL SLOPE TOWARD THE CHANNELS NOT LESS THAN 1 INCH PER FOOT NOR MORE THAN 2 INCHES PER FOOT. WHERE DROP BOWL AND PIPING CANNOT BE USED, PROVIDE SMOOTH TRANSITION INTO TROUGH AS DIRECTED / APPROVED BY MT. OLYMPUS IMPROVEMENT DISTRICT.

7. PIPE CONNECTIONS TO EXISTING MANHOLES SHALL BE MADE IN SUCH A MANNER THAT THE FINISH WORK WILL CONFORM AS NEARLY AS PRACTICABLE TO THE ESSENTIAL APPLICABLE REQUIREMENTS SPECIFIED FOR NEW MANHOLES, INCLUDING ALL NECESSARY CONCRETE WORK, CUTTING, AND SHAPING.

8. INVERT COVERS SHALL BE PLACED BY CONTRACTOR PRIOR TO CONSTRUCTION.

# Manhole Collar

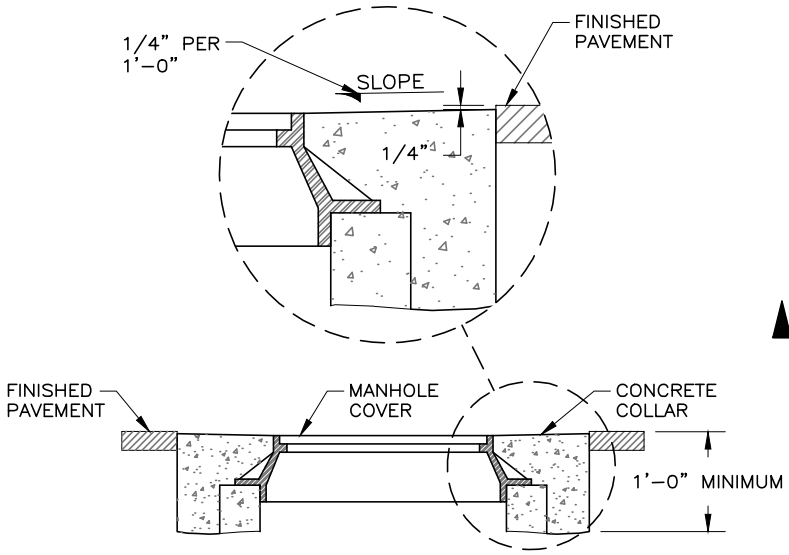


SECTION 1 / –

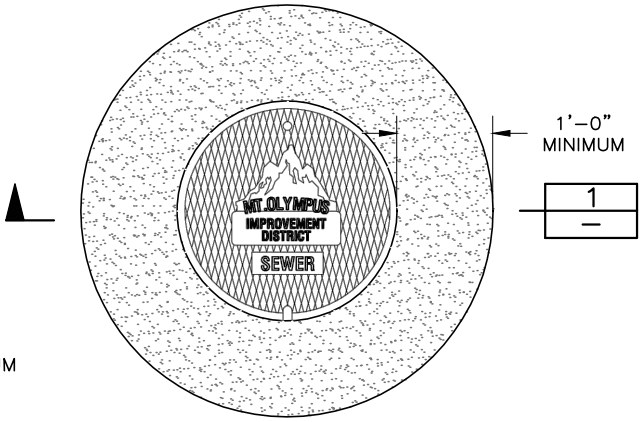


MANHOLE COLLAR

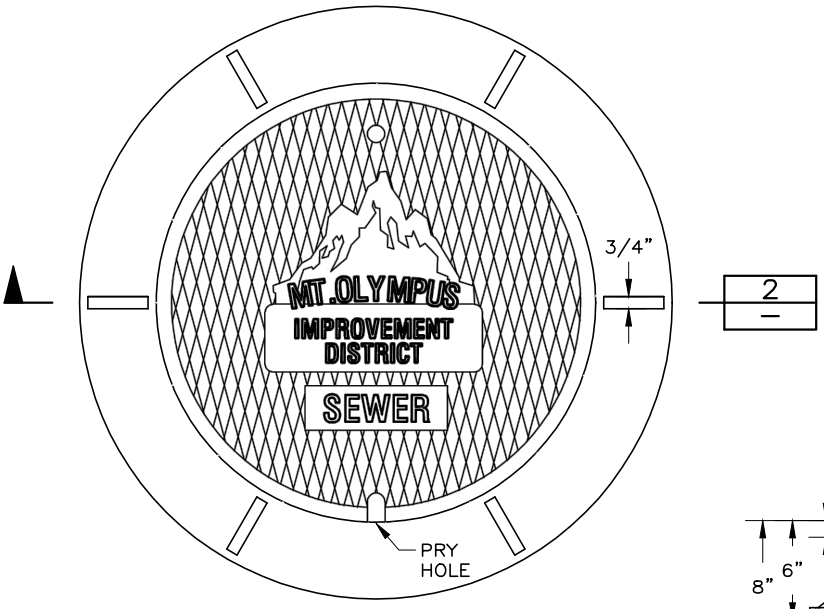


FRAME AND COVER

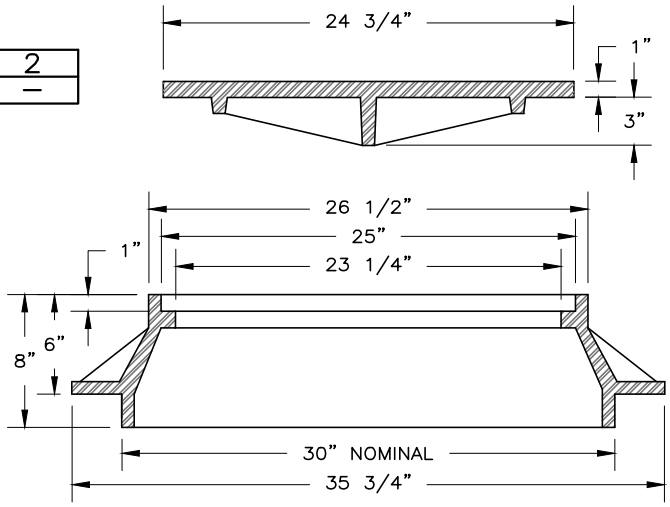


SECTION 2 / –

NOTES:

1. CONCRETE SHALL BE CLASS 4000 AS PER APWA SECTION 03 30 04. U–CART OR HAND MIXED CONCRETE WILL NOT BE ACCEPTED.
2. BACKFILL WITH GRADE 1 UNTREATED BASE COURSE AS PER APWA 32 11 23 2.1.
3. GRADE RINGS SHALL BE APWA STANDARD PLAN NO. 361. MTOID ALLOWS THE USE OF WHIRLYGIG OR APPROVED EQUIVALENT FOR SETTING GRADE RINGS.
4. CONCRETE COLLAR SHALL BE APWA STANDARD PLAN NO. 362.
5. LID SHALL BE CAST WITH "MTOID" LOGO.

# Abandon Existing Manhole

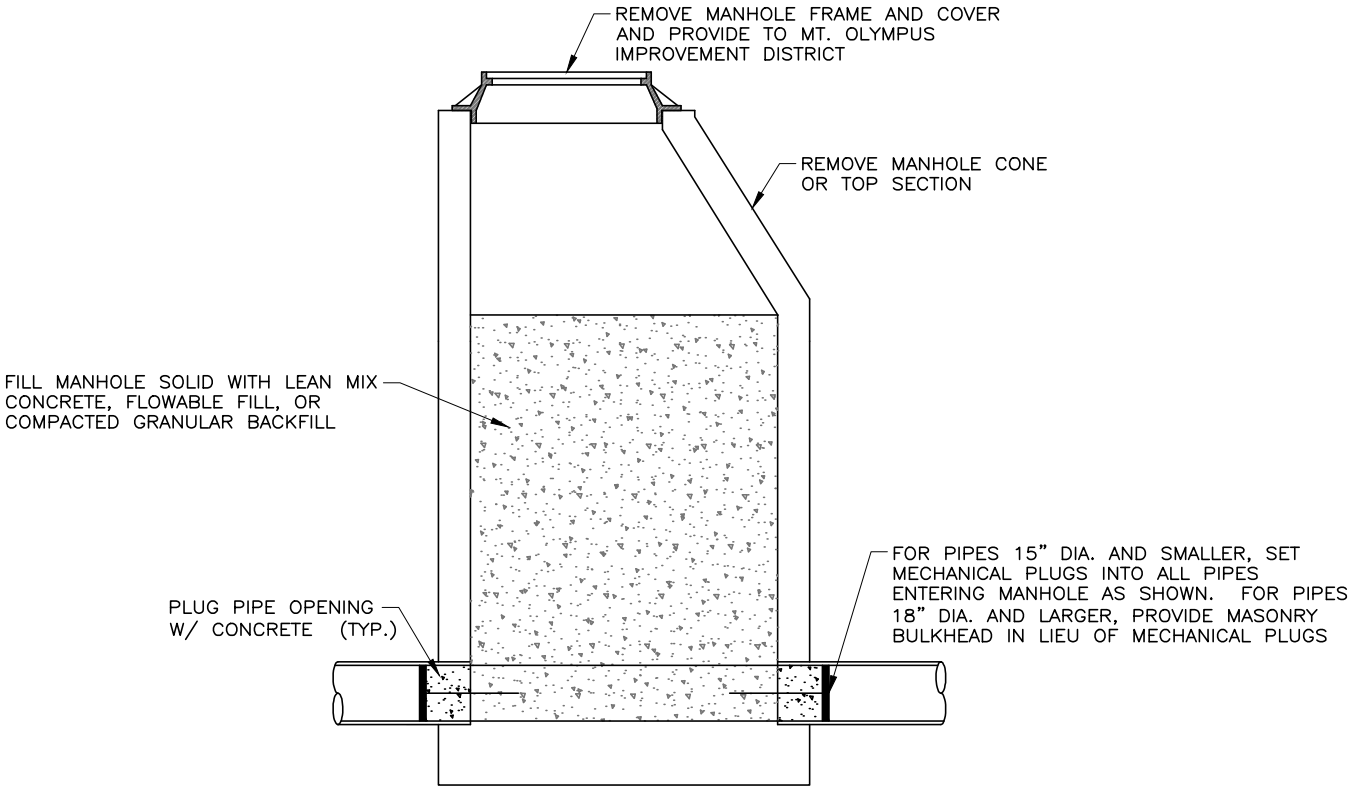


ABANDON EXISTING MANHOLE

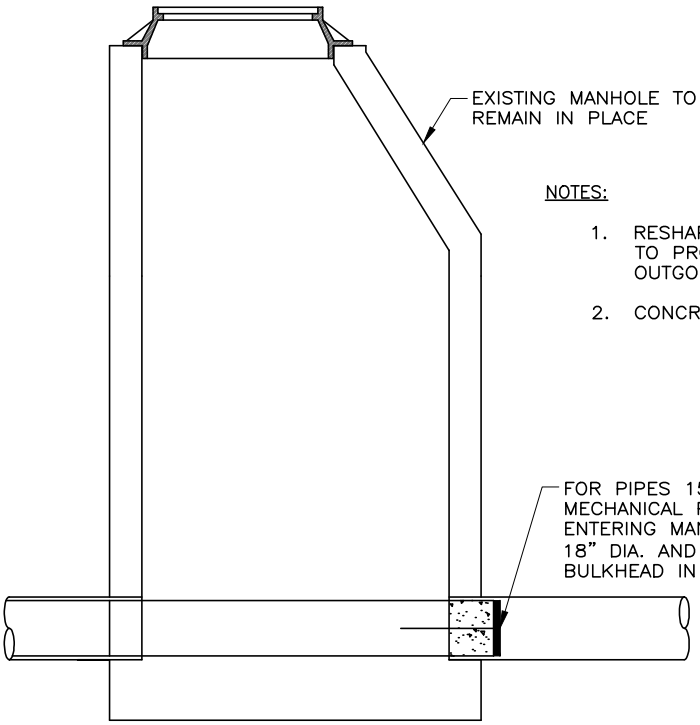


NOTES:

1. RESHAPE AND FILL EXISTING CHANNEL AS NECESSARY TO PROVIDE SMOOTH CONTOUR BETWEEN INCOMING AND OUTGOING PIPES.
2. CONCRETE: CLASS 4000, APWA SECTION 03 30 04.

ABANDON PIPE AT EXISTING MANHOLE

# Typical Sewer Lateral & Cleanout

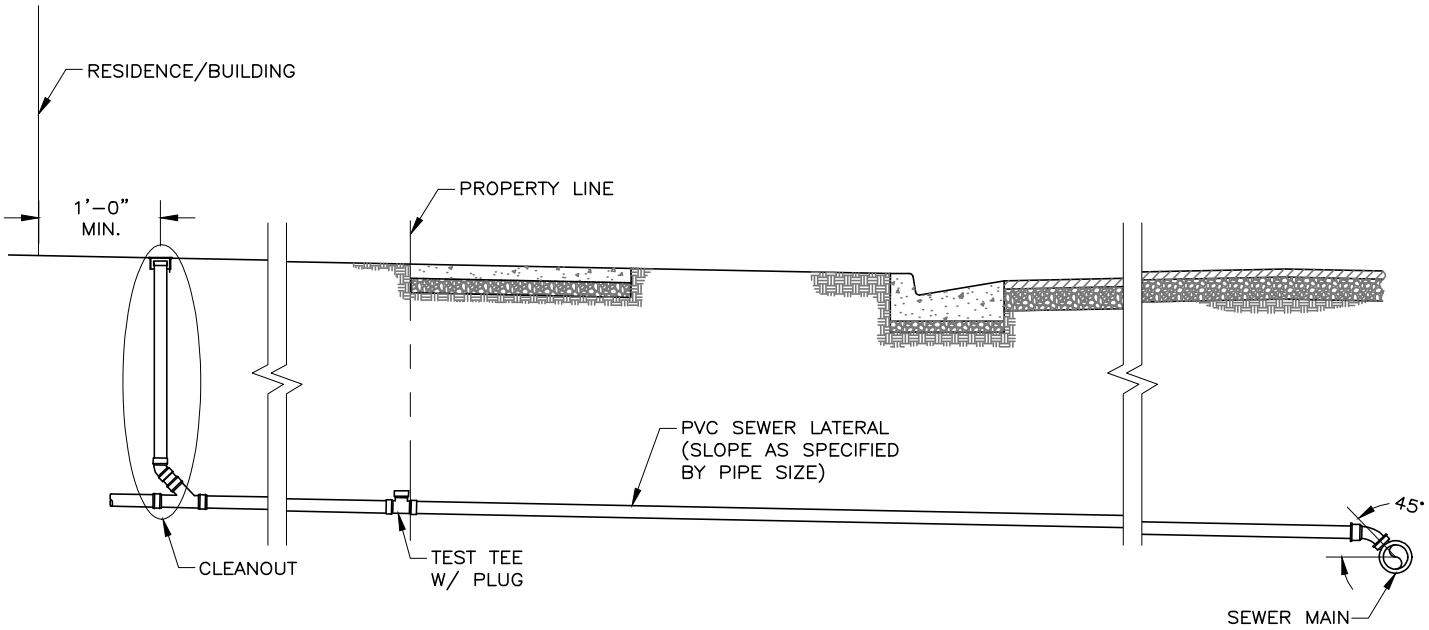


TYPICAL SEWER LATERAL

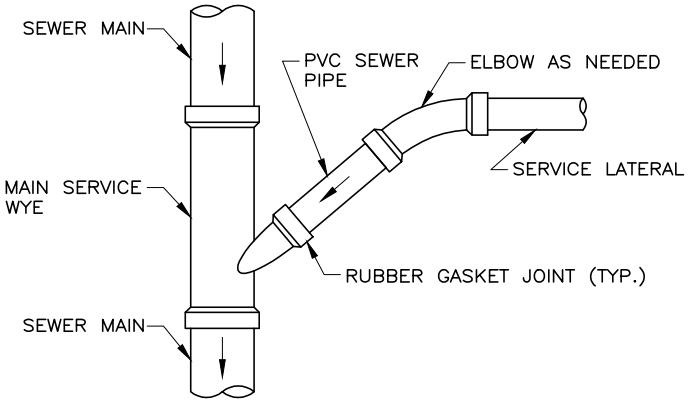


SERVICE CONNECTION
TO NEW MAIN

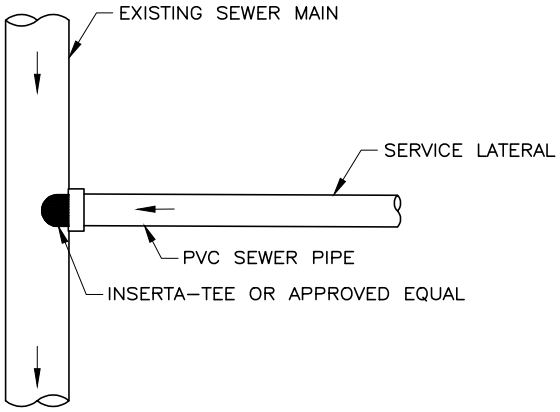


SERVICE CONNECTION
TO EXISTING MAIN

NOTES:

1. SERVICE LATERAL SHALL BE 4" OR 6" AS SHOWN ON PLANS OR AS DIRECTED BY MT. OLYMPUS IMPROVEMENT DISTRICT.
2. SEWER LATERALS SHALL CONNECT TO SEWER MAIN AT EITHER A 22.5° OR 45° ANGLE.
3. LATERAL CONNECTIONS SHALL BE A MINIMUM OF 24 INCHES OFF OF BELL SPIGOT OF SEWER MAIN.
4. ONLY ONE (1) NEW LATERAL CONNECTION SHALL BE ALLOWED PER 4 FOOT SEGMENT OF SEWER MAIN PIPE.

# Typical Sewer Lateral & Cleanout (Cont.)

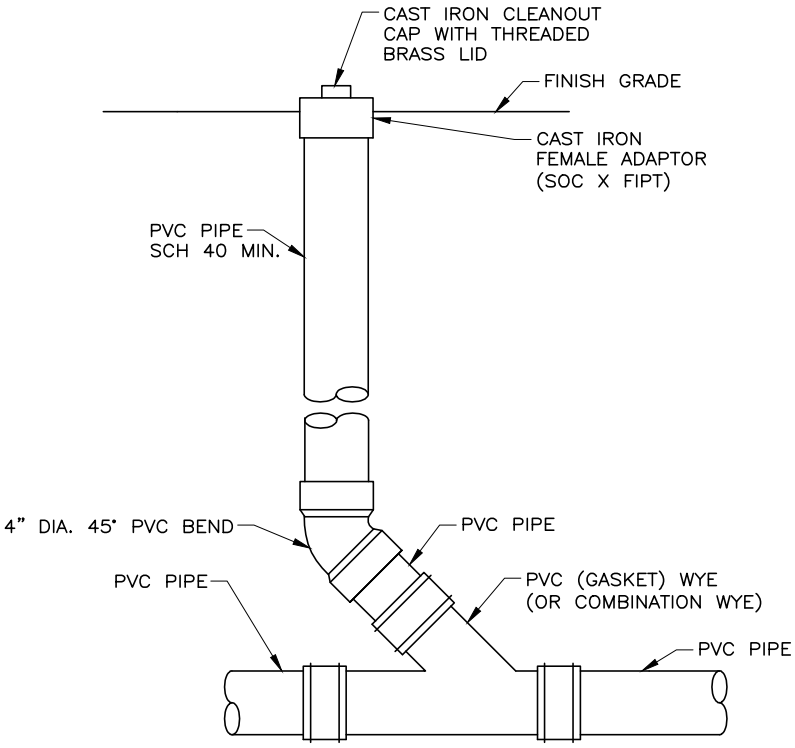


CLEANOUT

NOTES:

1. SIZE OF PIPING AS SHOWN ON DRAWINGS OR AS DETERMINED BY MT. OLYMPUS IMPROVEMENT DISTRICT.
2. PVC JOINTS SHALL BE GASKETED JOINTS. NO GLUE JOINTS ARE ALLOWED.
3. WHEN CONNECTING TO INTERIOR PIPING, SHEAR BAND FERNCO OR APPROVED EQUAL SHALL BE USED.

# Lateral Replacement & Cap-Off

NOTES:

1. REPLACE SEGMENT OF EXISTING SEWER LATERAL WHEN LATERAL IS BETWEEN 6" TO 12" BELOW NEW UTILITY.
2. WHERE LATERAL IS 6", USE 6" FITTINGS WITH 1% MIN. SLOPE.

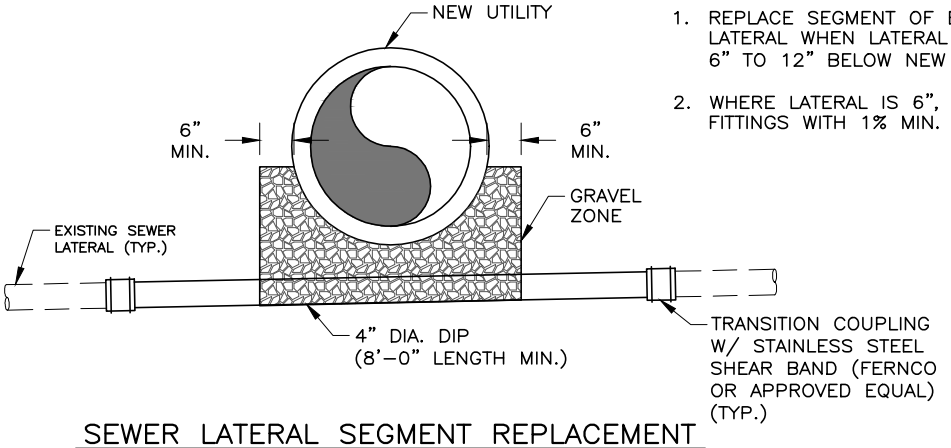


SEWER LATERAL SEGMENT REPLACEMENT FOR NEW UTILITY

NOTE:

REPLACE EXISTING SEWER LATERAL WHEN LATERAL IS WITHIN 6" OR IN CONFLICT WITH NEW UTILITY.

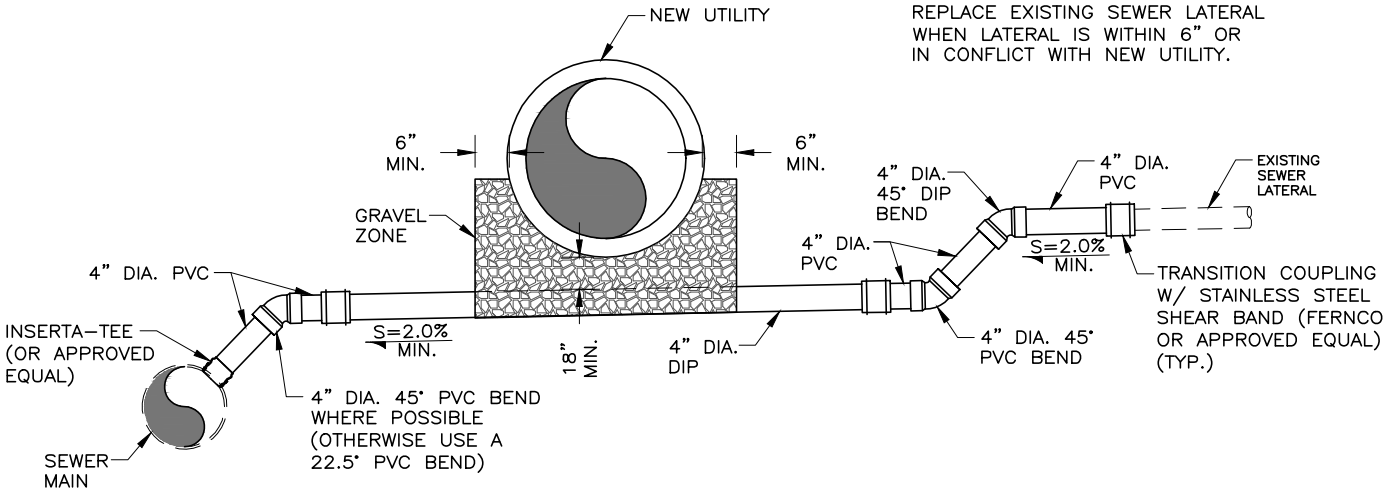


SEWER LATERAL RELOCATION FOR NEW UTILITY

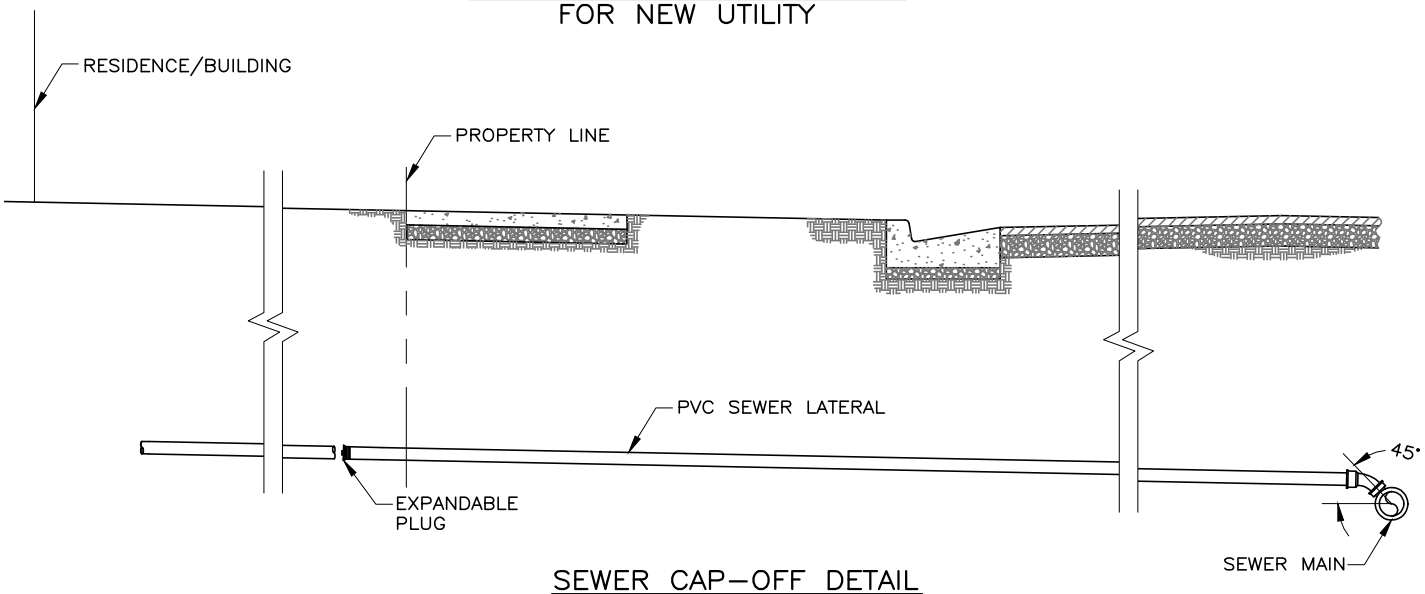


SEWER CAP-OFF DETAIL

NOTES:

1. A BAG OF QUIK-CRETE OR APPROVED EQUAL SHALL BE USED TO MIX AND FILL AROUND EXPANDABLE PLUG.
2. CAP-OFF SHALL BE BEHIND PROPERTY LINE. OLD PROPERTY LINE CLEANOUTS SHALL BE ABANDONED AS PART OF CAP-OFF PROCESS.

# Typical Trench Detail

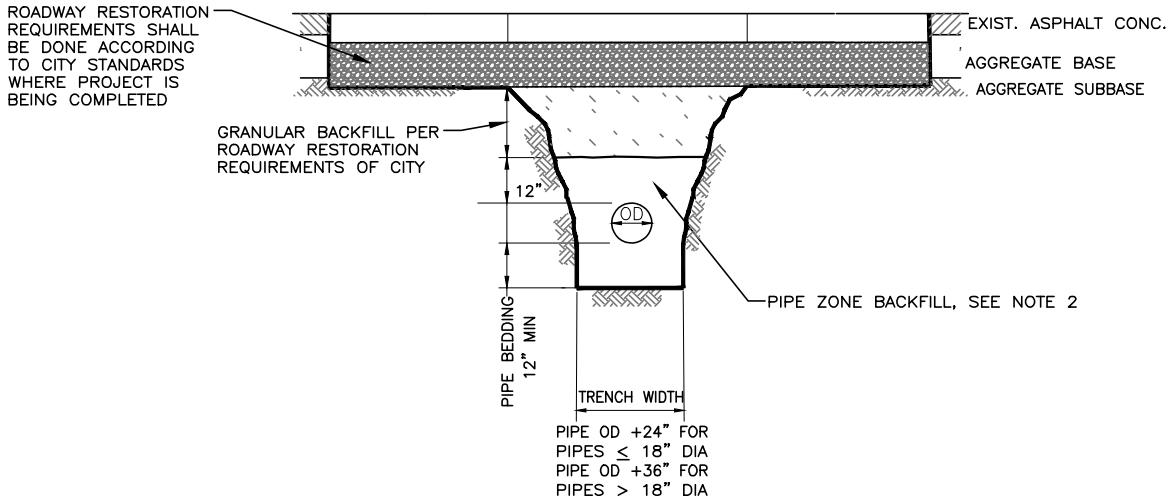


TYPICAL TRENCH SECTION

NOTES:

1. TRENCH EXCAVATION IN ACCORDANCE WITH APWA 31 23 16, OSHA, AND UOSH SAFETY STANDARDS.
2. PIPE ZONE MATERIAL TO BE A-1-a OR A-1-b ASTM D 3282 3/4" MAXIMUM PARTICLE SIZE. PEA GRAVEL AND "SQUEEGY" IS NOT ALLOWED IN ANY PART OF THE PIPE ZONE. MATERIAL SHALL BE PLACED IN LIFT NOT EXCEEDING 8" AND COMPACTED TO A MODIFIED PROCTOR DENSITY OF 95% OR GREATER (PER ASTM 1557) WITHOUT DAMAGING OR DEFLECTING PIPE.
3. RECYCLED ASPHALT SHALL NOT BE USED FOR BACKFILL IN ANY PART OF THE TRENCH.
4. FOR NEW CONNECTIONS TRENCH WIDTH SHALL BE 4 FOOT MINIMUM.

# Grease Trap & Sampling Manhole

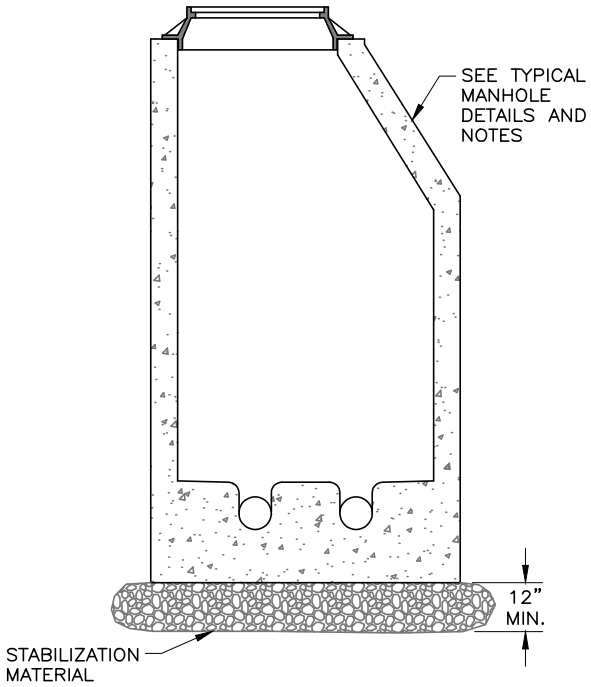


SECTION 1 / –

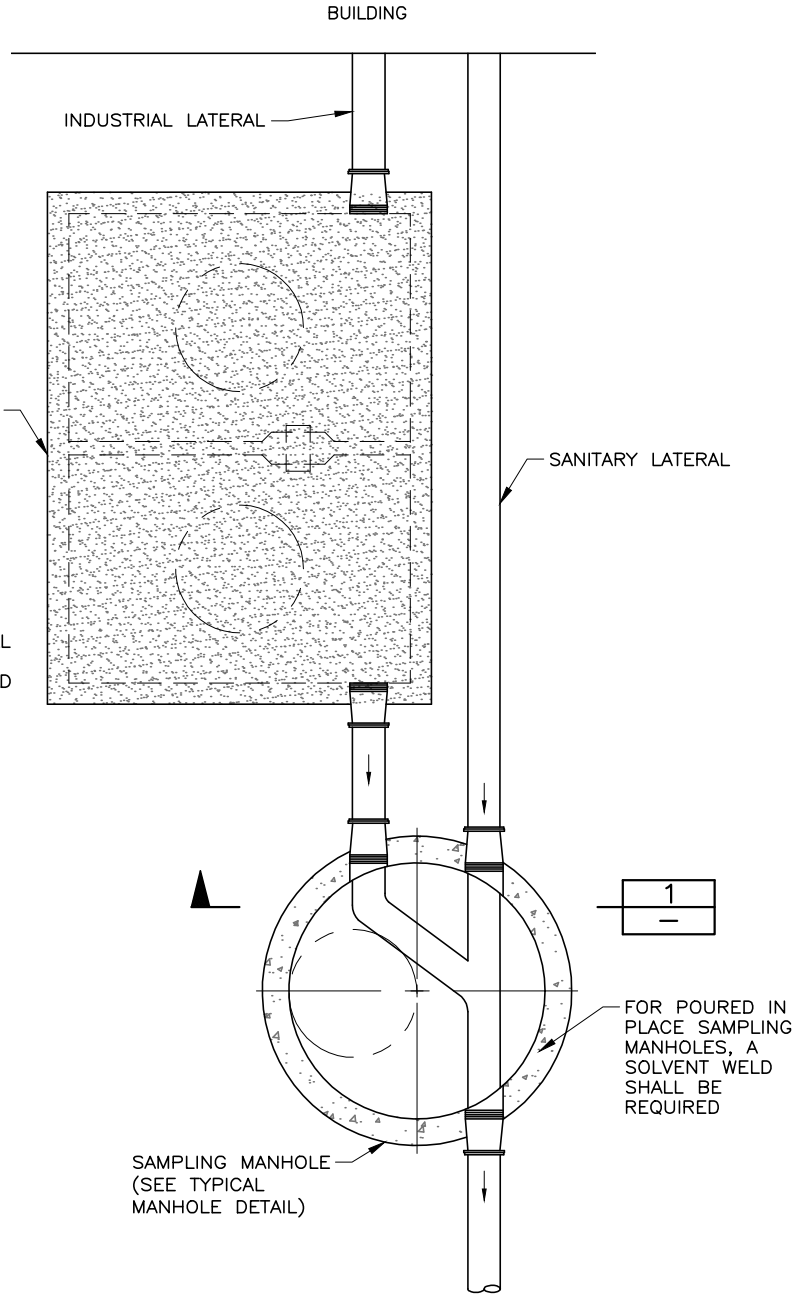


GREASE TRAP AND SAMPLING MANHOLE

# Grease Trap & Sampling Manhole (Cont.)

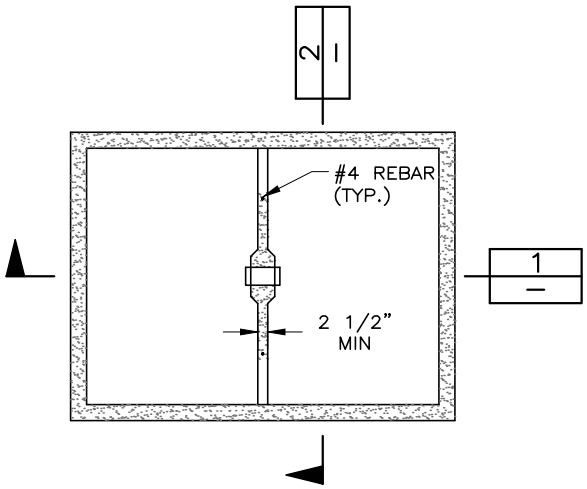


TYPICAL GREASE TRAP

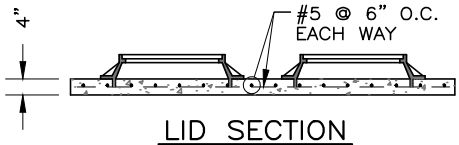


LID SECTION

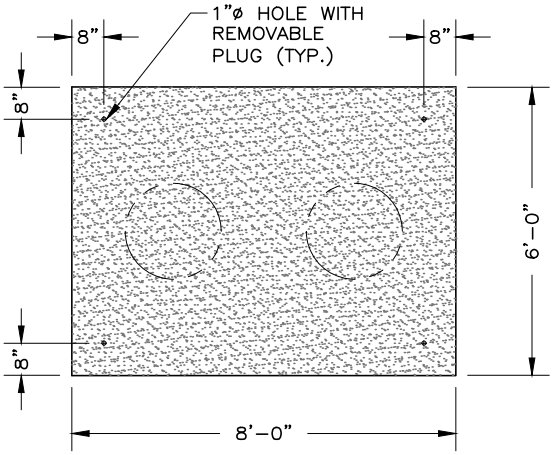


LID PLAN

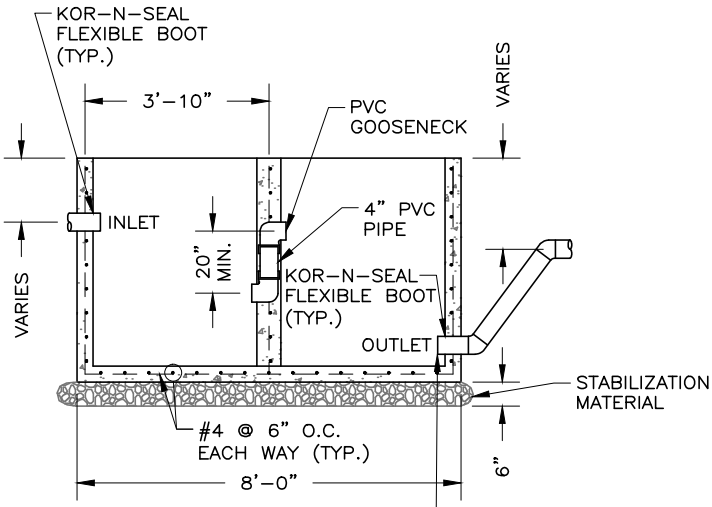


SECTION 1

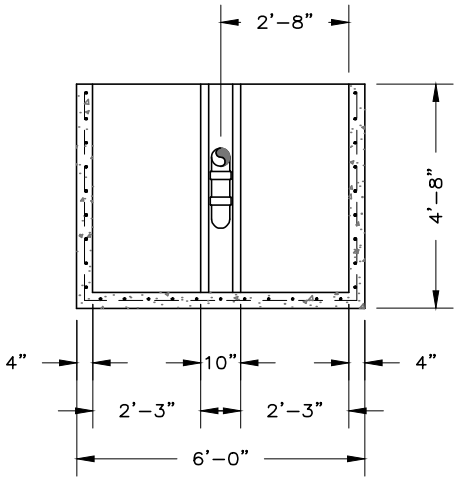


SECTION 2

NOTES:

1. MINIMUM VOLUME CAPACITY: 800 GALLONS. VARIANCES MUST BE APPROVED BY DISTRICT ENGINEER.
2. CONCRETE: CLASS 4000, APWA SECTION 03 30 04, PLACEMENT PER APWA SECTION 03 30 10, PROVIDE 1/2-INCH RADIUS EDGES. APPLY A BROOM FINISH. APPLY CURING AGENT.
3. REINFORCEMENT: DEFORMED, 60 KSI YIELD GRADE STEEL, ASTM A 615, PLACEMENT PER APWA SECTION 03 20 00.
4. PVC PIPE: APWA SECTION 33 05 07.
5. SEAL ALL WALL PENETRATIONS.
6. PROVIDE TWO 30" DIAMETER ACCESS OPENINGS WITH FRAME AND COVER (ONE FOR EACH SECTION OF GREASE TRAP).
7. BAFFLE WALL SHALL BE WITHIN 3" OF LID.
8. ALL FOOD AND BEVERAGE BUSINESSES OR ANY OTHER BUSINESSES WITH FLOOR DRAINS THAT CONNECT TO THE SEWER SYSTEM ARE REQUIRED TO HAVE A GREASE TRAP AND SAMPLING MANHOLE.